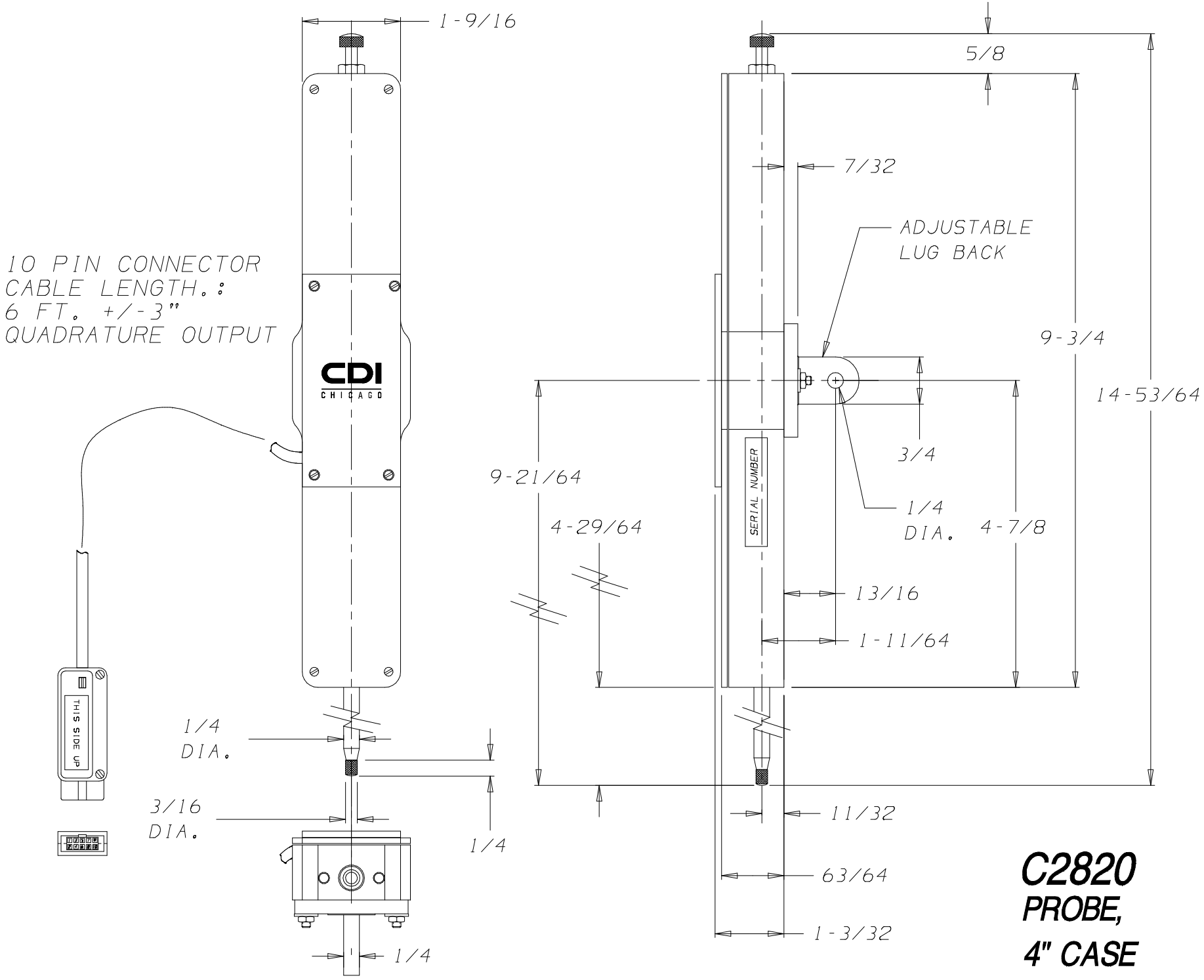
1-9/16
10 PIN CONNECTOR
CABLE LENGTH.:
6 FT. +/-3"
QUADRATURE OUTPUT
CDI
CHICAGO
THIS SIDE UP
1/4
DIA.
3/16
DIA.
1/4
1/4
5/8
7/32
ADJUSTABLE
LUG BACK
9-3/4
14-53/64
3/4
9-21/64
SERIAL NUMBER
1/4
DIA.
4-7/8
4-29/64
13/16
1-11/64
11/32
63/64
1-3/32
C2820
PROBE,
4" CASE